Molded Chip Fil

DISCONTINUED PRODUCT

NFC Series

SURFACE MOUNT

SURFACE MOUNT METALLIZED POLYESTER FILM CAPACITORS

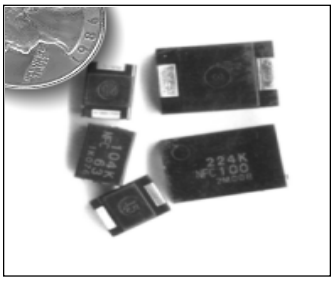

- MOLDED CONSTRUCTION WITH FLAME RETARDANT RESIN UL94-V-O
- WIDE VOLTAGE SELECTION
- EXCELLENT FREQUENCY CHARACTERISTICS
- BOTH FLOW AND REFLOW SOLDERING APPLICABLE
- CASE G CAN BE SUPPLIED IN TAPE/REEL
- CASE H & J CAN BE SUPPLIED IN MAGAZINE PACK

SPECIFICATIONS/CHARACTERISTICS

Item	Characteristics/Specifications
Operating Temperature Range at Rated Voltage	-40 ~ +85°C*
Maximum Working Temperature with Derating	+105°C (70% Derating of Rated Voltage)
Rated Voltage at 85°C	63, 100, 250, 400 & 630Vdc
Rated Capacitance Range	0.01 ~ 0.22µF (1KHz & 0.5V rms)
Capacitance Tolerance	±10% K (Optional ±5% J, ±20% M)
Maximum Dissipation Factor	0.7% (1KHz & 0.5Vrms)
Minimum Insulation Resistance after 1 Minute	15,000MW (10±1Vdc for 25~100Vdc, 100±15V for 250~400Vdc, 500±50V for 630 Vdc)
Withstanding Voltage (Through 1000Ω Resistance)	1.5 Times of Rated Voltage for 1 Minute

*In case of high frequency operation, temperature increase by self heat generation shall not exceed 10°C and the sum of ambient temperature and self heat generation shall not exceed maximum operating temperature.

STANDARD PRODUCTS AND CASE SIZE TABLE

Cap (µF)	Code	Working Voltage				
		63Vdc (1J)	100Vdc (2E)	250Vdc (2E)	400Vdc (2G)	630Vdc (2J)
0.01	103	-	G	-	-	H
0.015	153	-	G	-	-	H
0.022	223	-	G	-	H	J
0.033	333	-	G	H	J	-
0.047	473	-	G	H	J	-
0.068	683	G	H	J	-	-
0.10	104	G	H	J	-	-
0.15	154	H	J	-	-	-
0.22	224	H	J	-	-	-

Rated DC Voltage	Rated AC Voltage
63Vdc	40Vrms (≤2Khz)
100Vdc	63Vrms (≤800hz)
250Vdc	125Vrms (≤600hz)
400Vdc	200Vrms (≤500hz)
630Vdc	250Vrms (≤700hz)

DIMENSIONS (mm)

Case Code	Dim. (± 0.2mm)						
	L	W	H	a	b	h	l (min.)
G	7.2	5.2	3.2	1.0	3.0	2.2	4.4
H	10.0	8.2	4.5	1.5	4.0	1.8	6.2
J	12.5	8.2	5.0	2.0	4.0	2.2	7.9

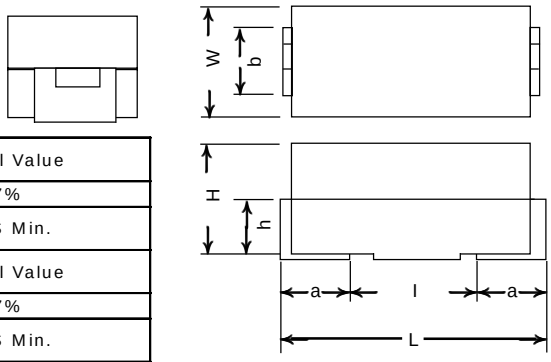

ENVIRONMENTAL CHARACTERISTICS

Load Test 1000 Hours at +105°C With 125% of Rated Voltage	Capacitance Change	Within ±5% of Initial Value
	Dissipation Factor	Less Than 0.77%
	Insulation Resistance	5,000 MEG-OHMS Min.
Humidity Test 500 Hours at +40°C With 90-95% R.H. and 100% of Rated Voltage	Capacitance Change	Within ±7% of Initial Value
	Dissipation Factor	Less Than 0.77%
	Insulation Resistance	5,000 MEG-OHMS Min.
	Withstanding Voltage	1.3 Times Rated Voltage for 1 Minute

MAXIMUM SOLDERING CONDITION LIMITS

REFLOW SOLDERING

PREHEAT: +180°C MAX. FOR A MAXIMUM OF 120 SECONDS.

REFLOW: +240°C MAX. FOR A MAXIMUM OF 30 SECONDS.

FLOW SOLDERING

PREHEAT: +120°C MAX. FOR 60 SECONDS.

FLOW: +260°C MAX. FOR A MAXIMUM OF 5 SECONDS.

PLEASE NOTE: PARTS HAVE A SHELF LIFE OF ONE WEEK (168 HOURS) at 30C/60% RH AFTER REMOVAL FROM DRYPACK. PREHEAT AND COOLING RATES SHOULD NOT EXCEED 2°C/ SECOND. EXCEEDING THESE RECOMMENDATIONS MAY RESULT IN CRACKS OR SPLITS IN THE MOLDED BODY.

NIC COMPONENTS CORPORATION

70 Maxess Rd., Melville, NY 11747 • (631)396-7500 FAX (631)396-7575

PART NUMBERING SYSTEM

NFC 104 K 100 TR

- TR: Packaging — TR: Tape and Reel; M: Magazine Pack; B: Bulk
- 100: Voltage (Vdc)
- K: Tolerance code
- 104: Capacitance code expressed in 3 digit system in pF, first two digits are significant, 3rd digit is no. of zeros
- NFC: Series

RECOMMENDED LAND PATTERN

Case	Reflow			Flow		
Code	A	B	P	A	B	P
G	2.0	3.0	5.0	3.0	3.0	5.0
H	2.5	4.0	7.0	3.5	4.0	7.0
J	3.0	4.0	8.5	4.0	4.0	8.5

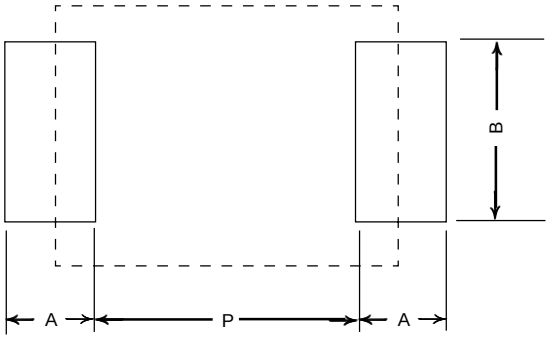

PACKAGING SPECIFICATION

(1) Packaging Availability

Case	Packaging Availability (Q'ty per unit package)		
Code	Bulk In Polybag	Tape/Reel	Magazine Pack
G	100 or 200 pcs	500 pcs/Reel	(NA)
H	100 or 200 pcs	(NA)	60 pcs/Magazine
J	100 or 200 pcs	(NA)	50 pcs/Magazine

(2) Tape and Reel Specifications (only available for "G" case size)

Fig. 4 Tape Dimensions

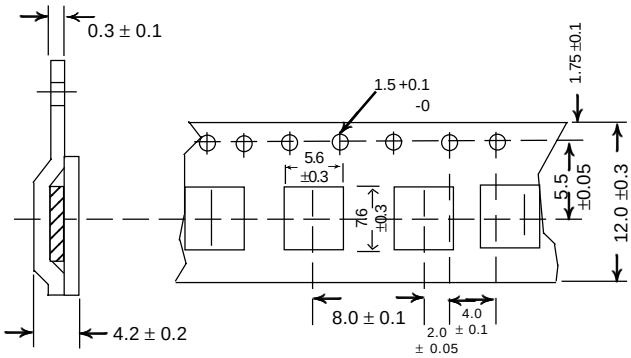

Tap material: Embossed plastic carrier tape with heat sealed top cover

Fig. 5 Reel Dimensions

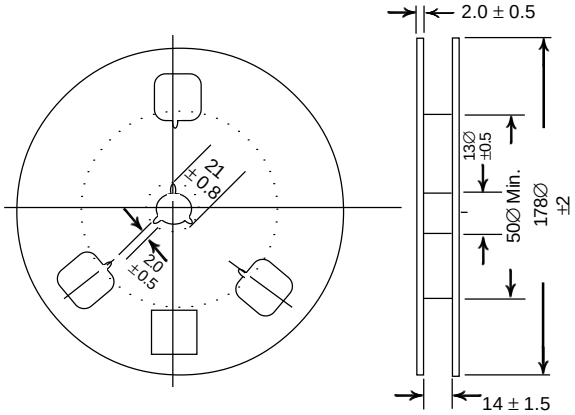

Reel material : cardboard

Fig. 6 Cover tape peel-off specification

1. Peel-off speed: 10~20mm/sec.
2. Peel-off force: F=20~70g
3. Peel-off angle: Θ=10°~20°

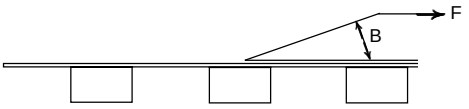

Note

1. Each reel has 550~1200mm leader tape followed by minimum 40mm empty tape. The ending of tape has minimum 40mm empty tape.
2. The missing of components shall be no more than 1 per reel.
3. A product label indicating following shall be on each reel.

(3) Magazine Pack Specification (Only available for H & J cases)

Fig. 7 Magazine Dimensions

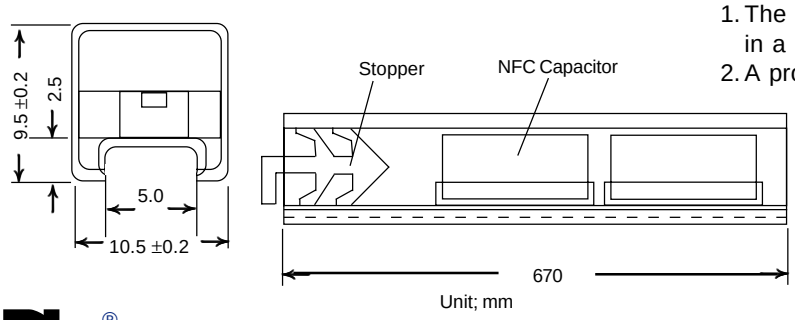

Note

1. The maximum of 20 magazines are packed and heat-sealed in a polybag.
2. A product label is attached in each polybag.

SURFACE MOUNT